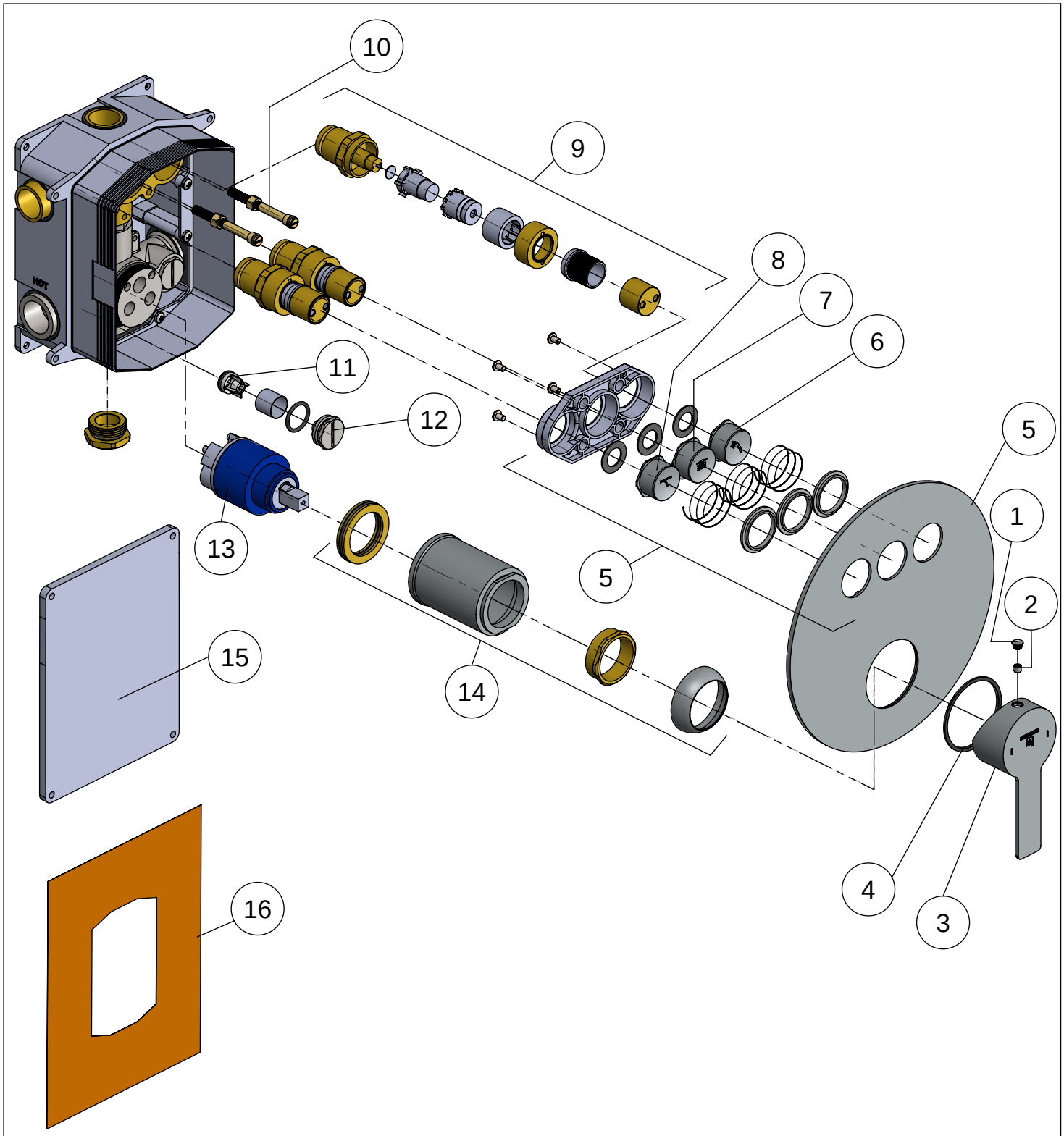

	PartNo	DE	EN
1		Chromkªppchen zum Hebel	chrome cap of lever
2	099 1105	Madenschraube M5	grub screw M5
3	390 9401	Griffhebel mit Logo und Markierungen, Chrom	single lever with logoand blue/red marks, chrome
4	390 9404	O-Ring f¿r Abdeckplatte der pushtronic Armaturen	o-ring for cover plate of pushtronic mixer
5	390 2338	Abdeckplatte Ï 200 mm, komplett mit Knºpfen, Chrom	cover plate Ï 200 mm, complete with buttons, chrome
6	390 9408	Pushtronic Knopf "Handbrause", Chrom	pushtronic button "hand shower", chrome
7	390 9406	Pushtronic Knopf "Kopfbrause", Chrom	pushtronic button "head shower", chrome
8	390 9410	Pushtronic Knopf "Schwall", Chrom	pushtronic button "stream", chrome
9	390 9405	Innenteil Pushtronic Knopf	inside part of pushtronic button
10		Befestigung-Schrauben zu UP-Kºrper (4 St¿ck), L=63mm	screw of fixing set for concealed body (4 pcs), L=63mm
11	099 9168	R¿ckflussverhinderer OF15/DN15	back flow preventer OF15/DN15
12		Blindstopfen	blind plug
13	390 9402	Keramik-Kartusche 45 mm (Kerox)	ceramic cartridge 45 mm (Kerox)
14	390 9403	Chromh¿lse,Messingscheibe mit O-Ring und Kugelkappe	chrome sleeve of cartrige with brass plate, o-ring and cap
15		Schallschutzmatte zu UP-Kºrper	acoustic insulation mat
16	099 3900	Kerdi Dichtmanschette f¿r Pushtronic	Kerdi waterproof membrane for pushtronic

390 2331

24.04.2020

STEINBERG