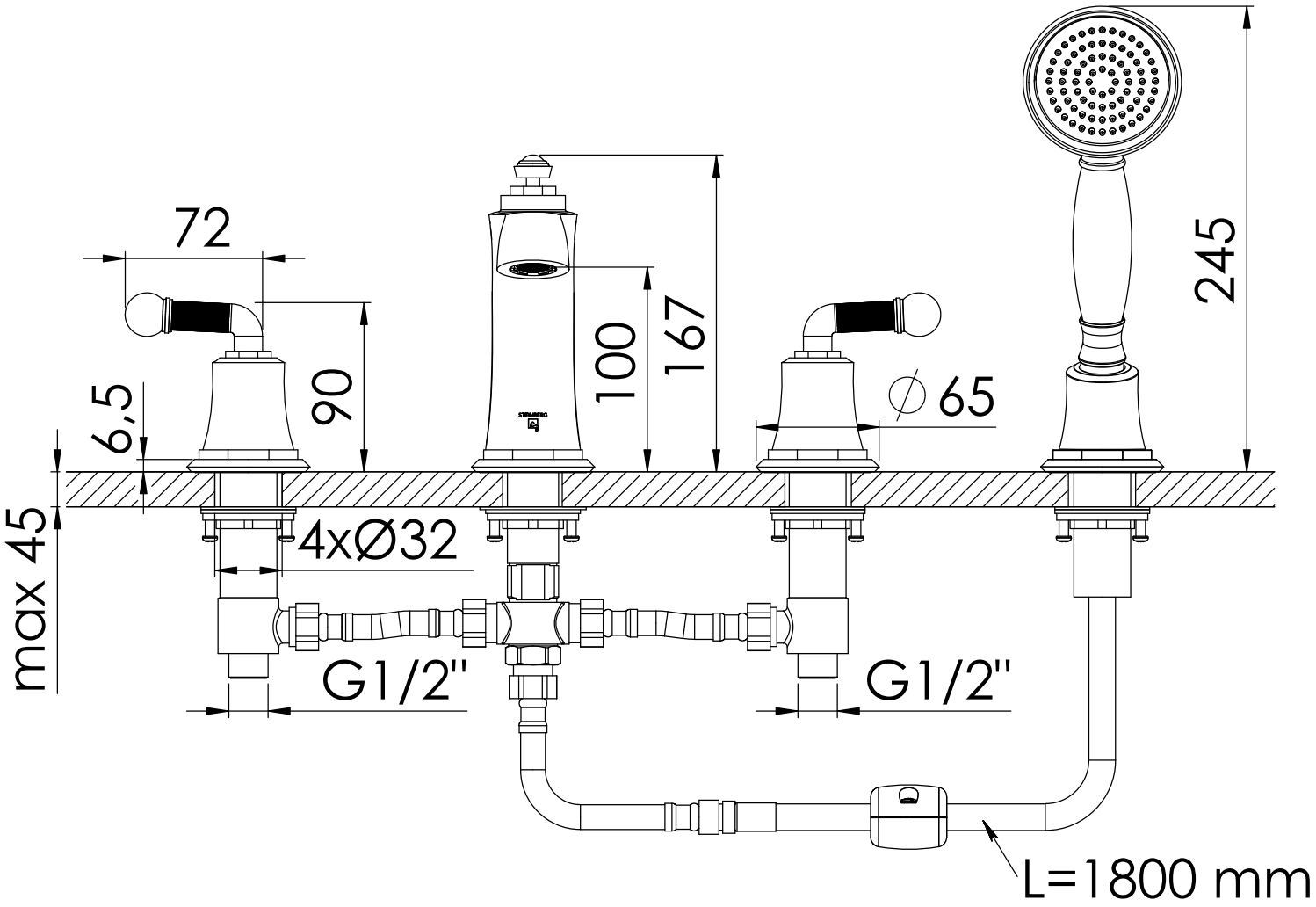
72
90
6,5
max 45
4xØ32
G1/2"
100
167
∅65
245
G1/2"
L=1800 mm

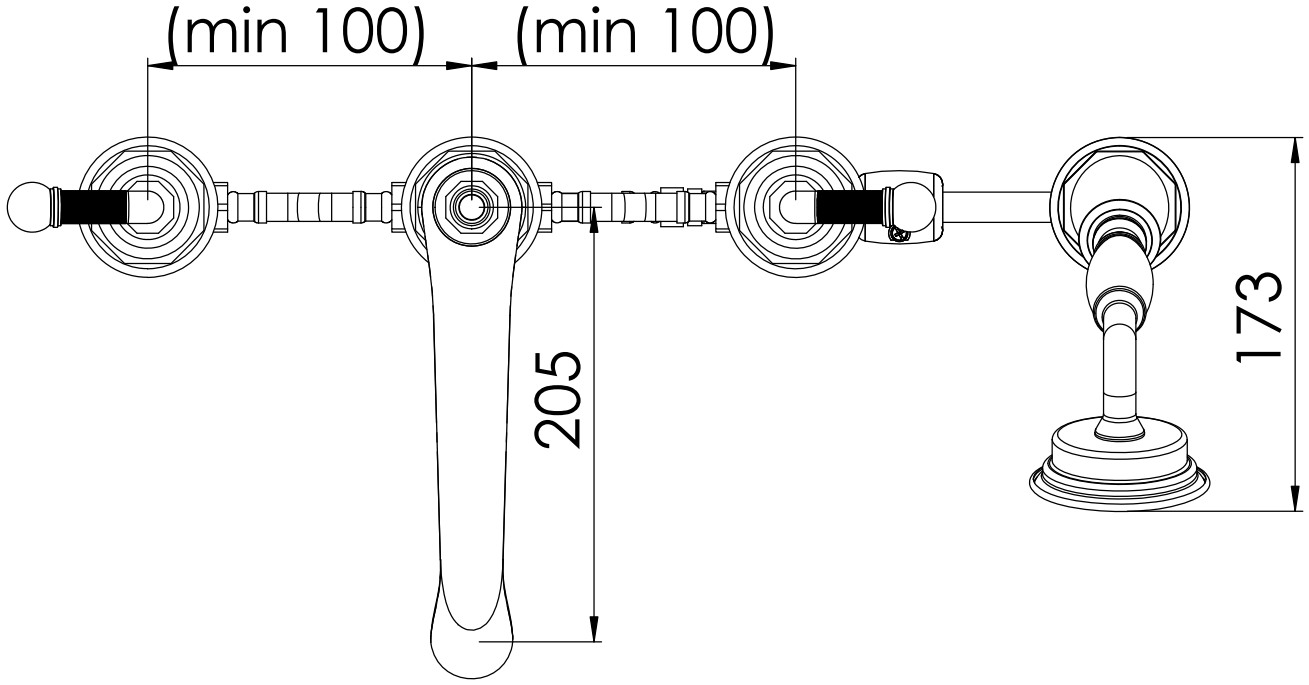
(min 100)
(min 100)
205
173

STEINBERG